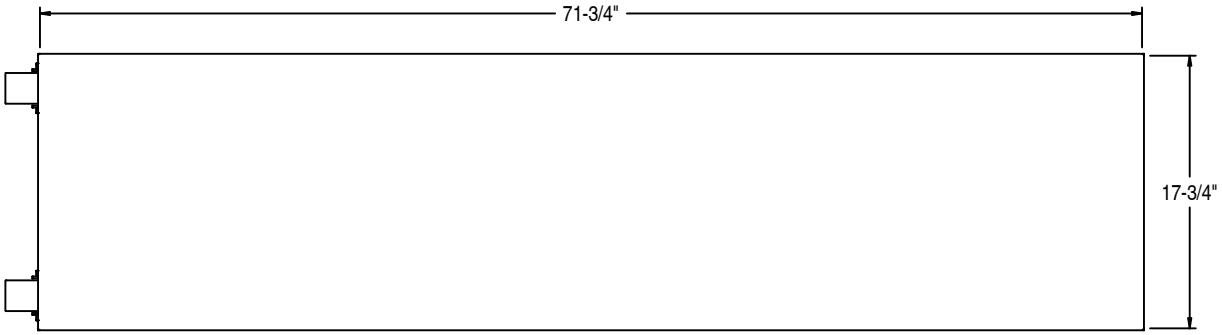

Top View

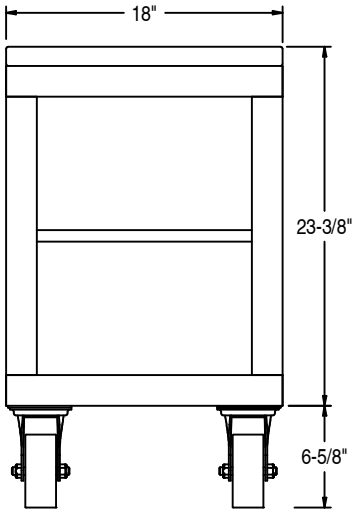

Side View

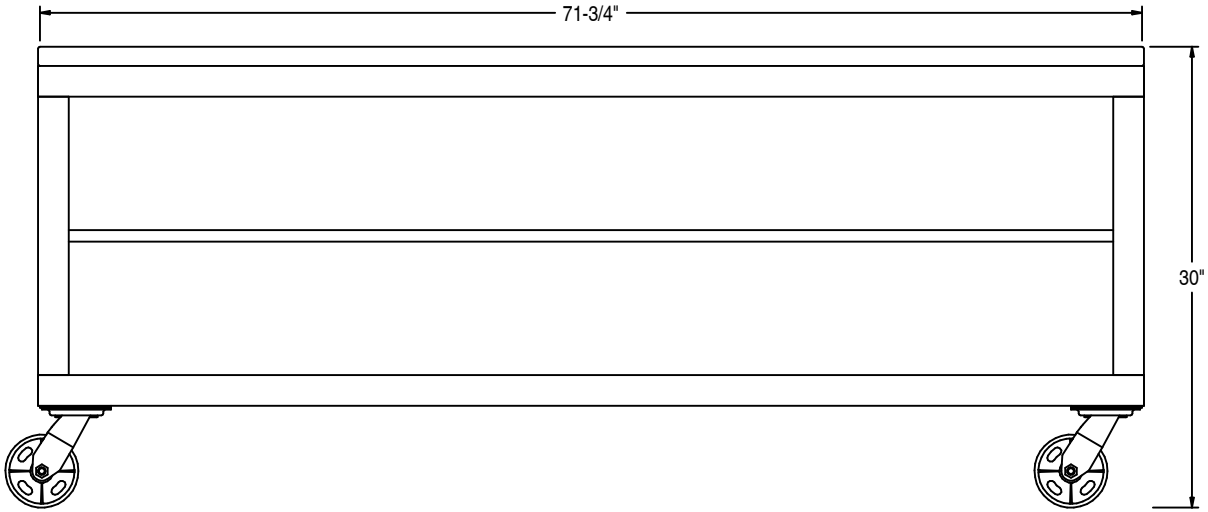

Front View

CROW WORKS EST. 1995	LOW INDUSTRIAL CART 6' VERSION	N.T.S.
	179 Straits Lane, Killbuck Ohio 44637 | 1.888.811.CROW | holler@crowworks.com	**Approx. Weight** 160 lbs

All ideas, designs, planning, drawings, and specifications are owned by, and are the property of Crow Works, and were created and developed for use on, and in connection with the specified project. Under no condition is this drawing or any part of, to be reproduced, used by or disclosed to any person, firm, or corp. without the written consent of Crow Works.